# San Joaquin Valley Unified Air Pollution Control District
## Cotton Gin Cyclone Supplemental

Facility Name: _____

Facility #: _____

Contact Name: _____

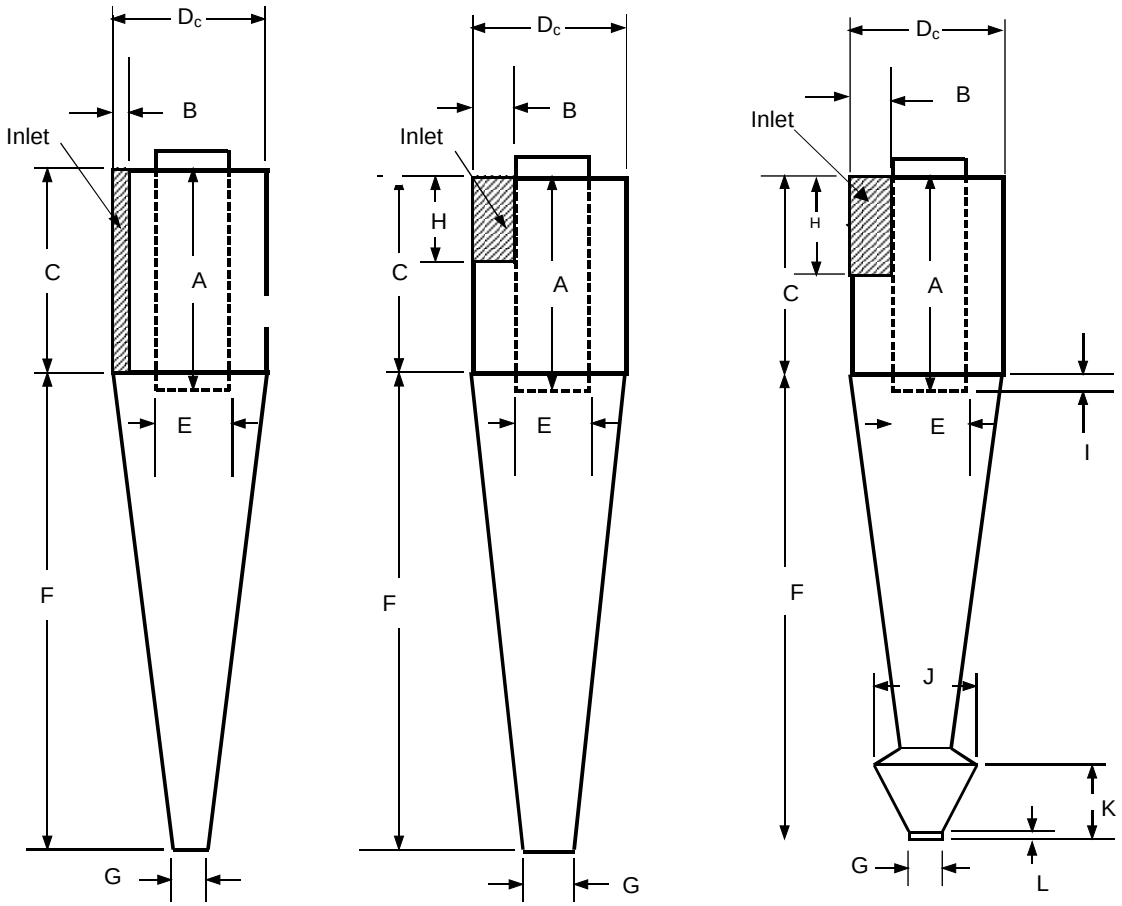


**Standard 1D3D Cyclone** **Enhanced 1D3D Cyclone** **1D3D w/Expansion Chamber**

**Guidance**

$D_c$ = Diameter

Standard
A = 9/8 $D_c$
B = 1/8 $D_c$
C = $D_c$
E = 1/2 $D_c$
F = 3 $D_c$
G = 1/4 $D_c$

Enhanced

A = 9/8 $D_c$
B = 1/4 $D_c$
C = $D_c$
E = 1/2 $D_c$
F = 3 $D_c$
G = 1/3 $D_c$

W/Expansion Chamber
A = 9/8 $D_c$
B = 1/4 $D_c$
C = $D_c$
E = 1/2 $D_c$
F = 3 $D_c$
G ≤ 0.33 $D_c$
H = 1/2 $D_c$
I = 1/8 $D_c$
J ≥ 0.9 $D_c$
K = 3/4 $D_c$
L = 3 inch

**Please provide the diameter (A, inch) and "System Served" and the dimensions of any MODIFIED components of the modified cyclones.**

| Permit# | Cyclone Airflow (cfm) | System Served | Type | Dc | A | B | C | E | F | G | H | I | J | K | L |
|---|---|---|---|---|---|---|---|---|---|---|---|---|---|---|---|
| *C-1234-1-1* | *3200* | *#1 precleaning* | *standard* | *40* | *45* | *5* | *40* | *20* | *120* | *10* | | | | | |
| | | | | | | | | | | | | | | | |
| | | | | | | | | | | | | | | | |
| | | | | | | | | | | | | | | | |
| | | | | | | | | | | | | | | | |
| | | | | | | | | | | | | | | | |
| | | | | | | | | | | | | | | | |
| | | | | | | | | | | | | | | | |
| | | | | | | | | | | | | | | | |
| | | | | | | | | | | | | | | | |
| | | | | | | | | | | | | | | | |
| | | | | | | | | | | | | | | | |
| | | | | | | | | | | | | | | | |